Paper 1

Ch

The Document Object Model

pg

Code

Boiler plate External

```
1. <!DOCTYPE html>
2. <html lang="eng" dir="ltr">
3.     <head>
4.         <meta charset="Utf-8">
5.         <title> My Website </ite>
6.         <link rel="stylesheet" href="style.css>
7.
8.     <head>
9.     <body>
10.
11.        <h1> Hello </h1>
12.
13.
14.
15.
16.    <script src="index.js" charset="utf-8"></script>
17.    </body>
18. </html>
```

HTML

- HEAD

Comments

- Both the CSS & Java Script are in external links.

Ln 6. the link to external .CSS document.

Ln 16. The link to external .Js document.

- The

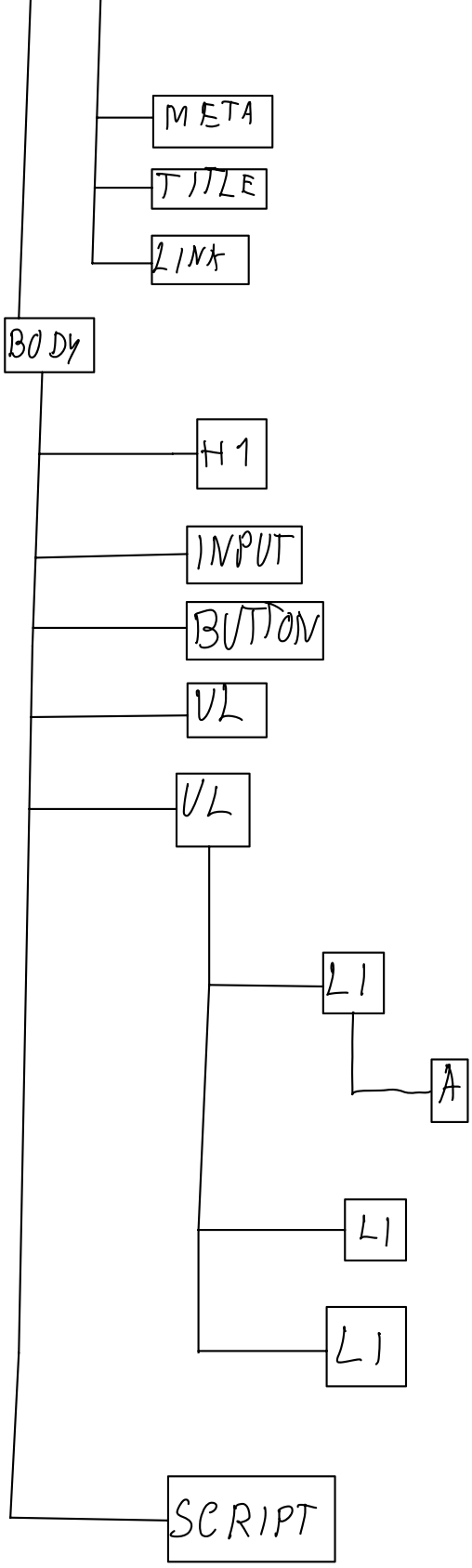

- The setter methods have parmeters & the getter methods don't.

- Do the use the dot notation.

- Method is what an object can do.
  Car. drive ();

- Methods have parenthesis @ the end.

DOM Java script

document. firstElementChild. firstElementChild;

- This selects the

```
document.firstElementChild.lastElementChild;
```

- This selects the body

```
document.firstElementChild.lastElementChild.firstElementChild;
<h1> Hello </h1>
```

- This selects the H1

```
Var heading = document.firstElementChild.lastElementChild.firstElementChild;
```

Head

Console

```
< Undefined
> heading
< <h1> Hello </h1>
> heading.innerHTML
```

- Once you've selected an element you can manipulate it.
- Once you press enter this is what is printed to the console.

```
>heading.innerHTML = "GoodBye";
< "Good Bye"
```

- If we want to manipulate the heading

```
> heading.style.color = "red";
```

```
< "red"
```

```
> document.querySelector("input").click;
```

- The .click simulates a mouse click. It's also a method a DOM a document object method function of the setter type.

- We use the . notation.

- click();
- appendChild()
- setAttribute()

New javascript DOM

```
document.querySelector(".list a").style.color = "red";
```

- Selecting HTML Elements

```
document.querySelector(".bth").style.backgroundColor = "yellow";
```

- Changing style of HTML Elements.

```
document.querySelector("h1").classList.add("huge");
document.querySelector("h1").classList.remove("huge");
document.querySelector("h1").classList.toggle("huge");
```

- The seperation of concerns. Structure, style behavior

```
document.querySelector("h1").textContent; = "Good Bye"
document.querySelector("h1").innerHTML = "<em> Good Bye </em>;"
```

- With .textContent you can only change the text.
- With the .innerHTML you can actually do HTML injection & put HTML there where it wasn't before.
- All these behaviors or JS styling can be tied to a function or a click event.

How to manipulate attributes.

- Attributes are whatever is inside the element tags ex. href, src, img, etc

```
// How to get the attribut of an element using the console"
> document.querySelector("a");
```

```
< a  href = "https://www.google.com"> Google </a>
> document.querySelector("a").attributes;
< NamedNodeMap {0: href, href: href, length: 1}
> document.querySelector("a").getAttribute("href");
< "https://www.google.com"
> document.querySelector("a").setAttribute("href, https:www.bing.com");
```